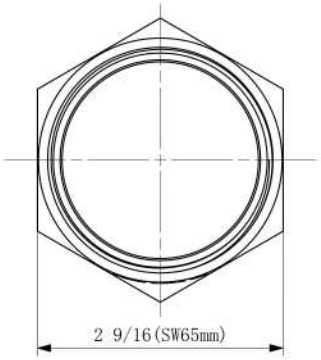

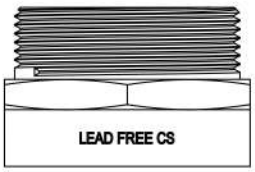

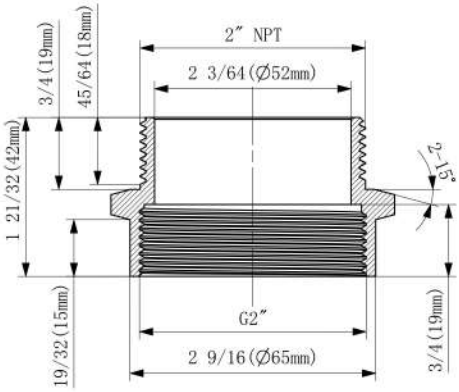

					LDAD FREE BRASS ADAPTER	Cascada Showers
Mark	Number	Change file number	Signature	Date		Graphing tagging / Weight / Example
Set a count					2″NPT(M)*2″G(F)	Total Page / Page
Proofread						Part No: CSSL56162550
Refine						
Batch						