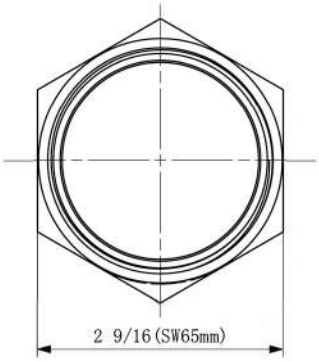

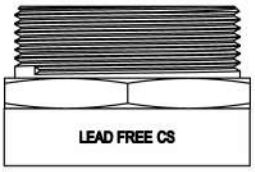

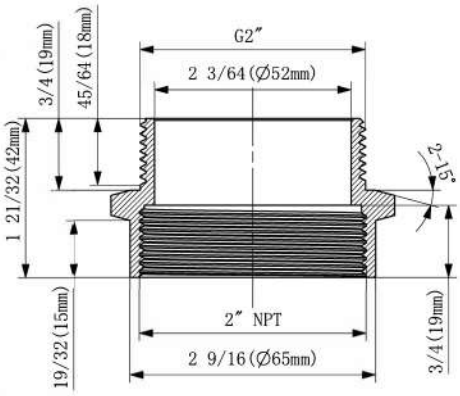

					LDAD FREE BRASS ADAPTER	Cascada Showers
						Graphing tagging / Weight / Example
Mark	Number	Change file number	Signature	Date		
Set a count					2″NPT (F) *2″G (M)	Total Page / Page
Proofread						Part No: CSSL56162555
Refine						
Batch						