HDD9365

1:Use the screws (19) and plastic mounting componcents (20) fix the controller on the wall.
2:Connect pipes (4), (8), (9), (10), (11) to the controller.As the installation indicated.
3:Connect the brass support arm (1) with the supply pipe,install the top shower (2).
4:Mount the massage spray (1), (2), (3) into the wall according to your requirement,connect with supply pipe.
5:Mount the hand shower holder on the wall and connect with supply pipe.install the hose and hand shower.
6:After the installation complete,install the controller and the panel as shown.

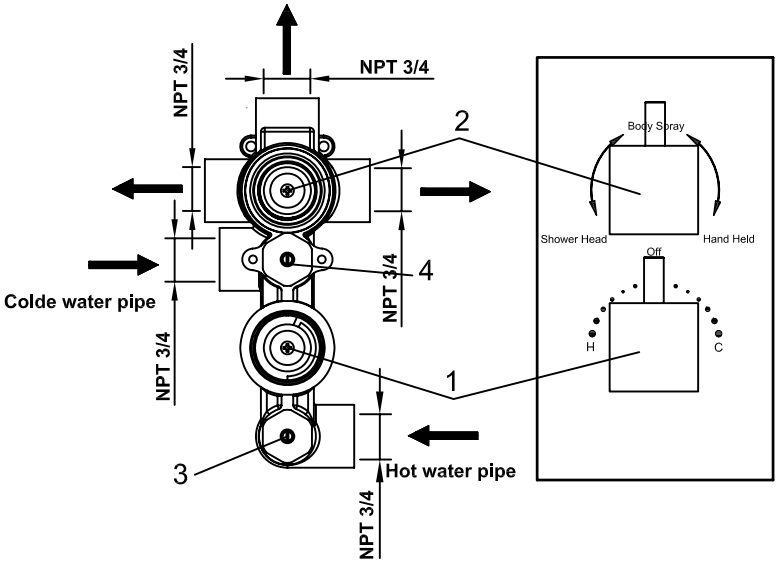

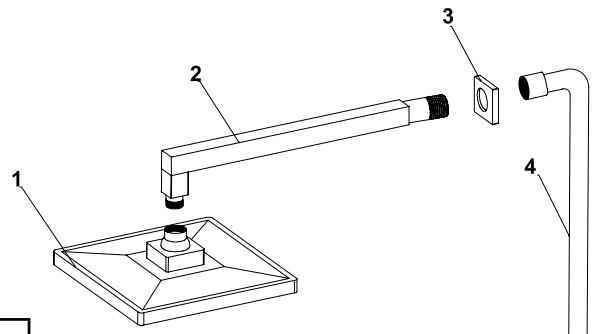

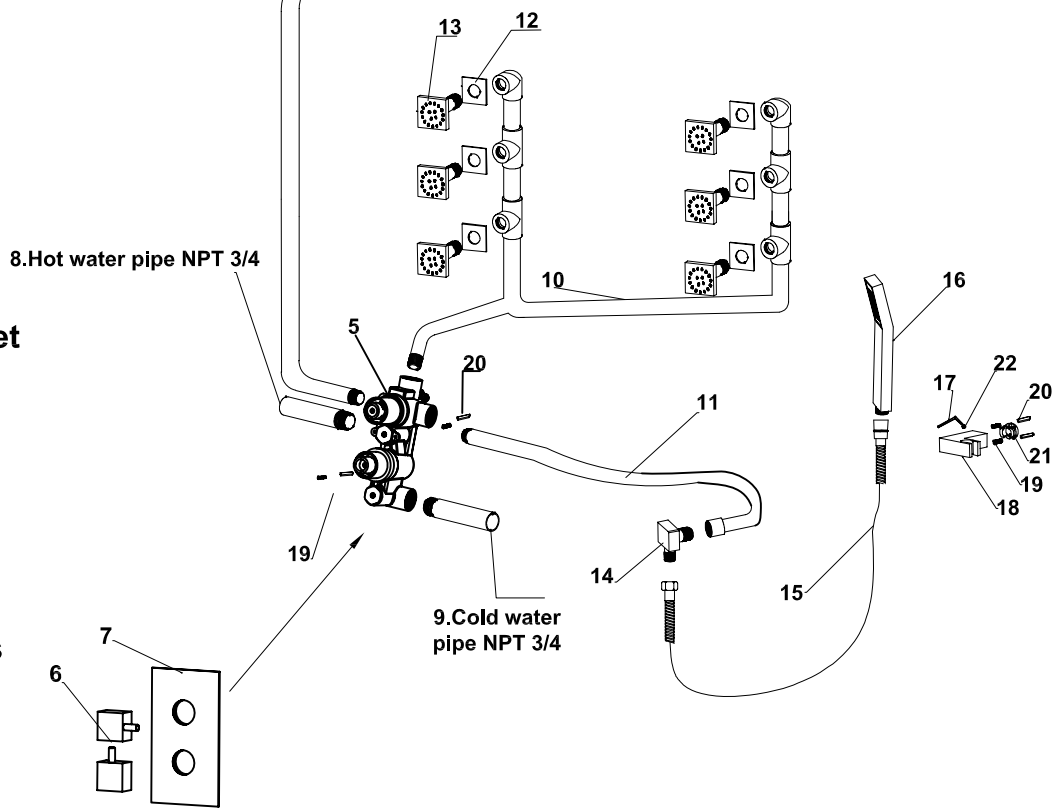

Attention:

1.Part 1 is temperature-control valve,it have been set at the right temperature when they leave the factory.Turn right to lower temperature,turn left meanwhile press the button to increase temperature.Installed part 1 as picture shown.
2.Part 2 is a water-control valve with two positions for turning,turning in the middle is to close water, turn right or left is to open water.
3.Part 3 and Part 4 are used for filtering.Inside parts could be dismantled to clean.